Current part is item (3) on diagram. Available at www.oshkoshequipment.com

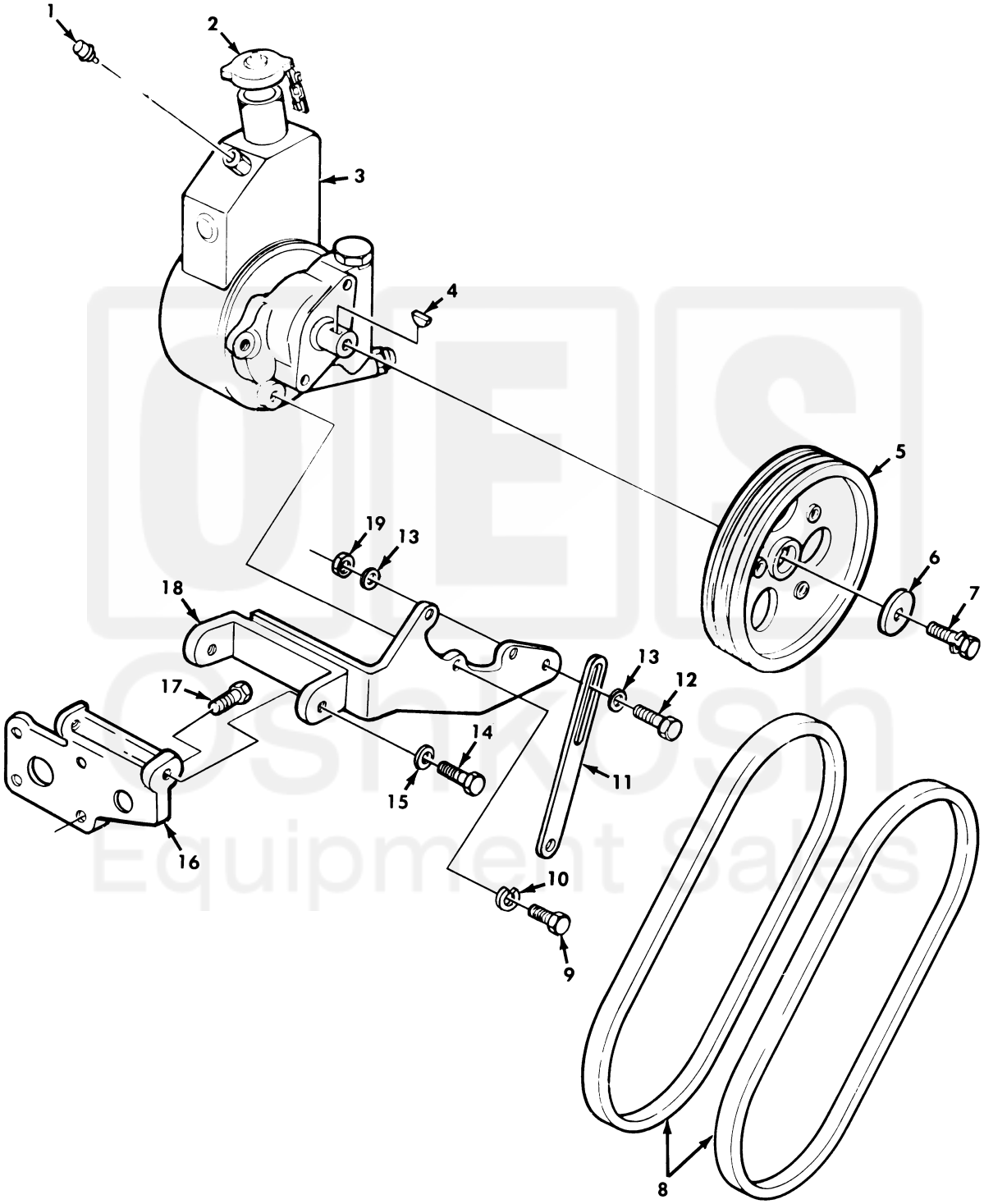

Figure 214. Power Steering Pump Assembly, Pulley Assembly, Belts, and Mounting Hardware.

Current part is item (3) on diagram. Available at www.oshkoshequipment.com

Current part is item (3) on diagram. Available at www.oshkoshequipment.com

(1) ITEM NO	(2) SMR CODE	(3) NSN	(4) CAGEC	(5) PART NUMBER	(6) DESCRIPTION AND USABLE ON CODE (UOC)	(7) QTY
					GROUP 1410 HYDRAULIC PUMP OR FLUID MOTOR ASSEMBLY	
					FIG. 214 POWER STEERING PUMP ASSEMBLY,BELTS,AND MOUNTING HARDWARE	
1	PAOZZ	4310-01-094-0791	90005	569020-02	BREATHER.....	1
2	PAOZZ	6680-01-063-0266	19954	ER27003	GAGE ROD-CAP,LIQUID INCLUDES CHAIN AND CLIP.....	1
3	PAOZZ	2530-00-134-4229	19207	12356786	PUMP,ROTARY.....	1
4	PAOZZ	5315-00-616-5514	96906	MS35756-6	KEY,WOODRUFF.....	1
5	PAOZZ	3020-00-134-7946	19207	11664244	PULLEY,GROOVE.....	1
6	PAOZZ	5310-00-231-0280	19207	11664241	WASHER,FLAT.....	1
7	PAOZZ	5306-00-238-5661	19207	11664243	BOLT,ASSEMBLED WASH.....	1
8	PAOZZ	3030-00-834-0507	96906	MS51066RP47-2	BELTS,V,MATCHED SET.....	1
9	PAOZZ	5305-00-269-3240	80204	B1821BH038F150N	SCREW,CAP,HEXAGON H.....	3
10	PAOZZ	5310-00-637-9541	96906	MS35338-46	WASHER,LOCK.....	3
11	PAOZZ	3040-00-230-3598	19207	11664549	ARM,ADJUSTING,POWER.....	1
12	PAOZZ	5305-00-269-3239	80204	B1821BH038F138N	SCREW,CAP,HEXAGON H.....	1
13	PAOZZ	5310-00-809-4061	96906	MS27183-15	WASHER,FLAT.....	5
14	PAOZZ	5305-00-709-8523	80204	B1821BH044F125N	SCREW,CAP,HEXAGON H.....	2
15	PAOZZ	5310-00-209-0965	96906	MS35338-47	WASHER,LOCK.....	2
16	PAOZZ	5340-00-174-3424	15434	127459	BRACKET,ACCESSORY,D.....	1
17	PAOZZ	5305-01-088-6019	15434	3010596	SCREW,ASSEMBLED WAS.....	4
18	PAOZZ	2530-00-230-3596	19207	11664675	BRACKET ASSEMBLY,PO.....	1
19	PAOZZ	5310-00-982-4908	96906	MS21045-6	NUT,SELF-LOCKING,HE.....	1

END OF FIGURE

Current part is item (3) on diagram. Available at www.oshkoshequipment.com